FINAL REPORT

U.S. Department of Energy

NOVEL ANALYTICAL TECHNIQUES BASED ON AN ENHANCED ELECTRON ATTACHMENT PROCESS

Principal Investigator: Lal A. Pinnaduwage
The University of Tennessee, Knoxville, TN

Collaborators: Michelle V. Buchanan
Gregory B. Hurst
Oak Ridge National Laboratory, Oak Ridge, TN

Project ID: 55328

Project Duration: October 1, 1996 to September, 2000

TABLE OF CONTENTS

A. EXECUTIVE SUMMARY 1

B. RESEARCH OBJECTIVES 2

C. METHODS AND RESULTS 3

1. Methods (Approach) 3
   a. Rydberg States of Molecules 3
   b. Enhanced Electron Attachment to Rydberg States of Molecules 5

2. Techniques and Results 7
   a. Laser Studies 8
   b. Gas Discharge Studies 13

D. RELEVANCE, IMPACT, AND TECHNOLOGY TRANSFER 17

E. PROJECT PRODUCTIVITY 17

F. PERSONNEL ASSOCIATED WITH THE PROJECT 17

G. PUBLICATIONS 18

   a. Peer-Reviewed Publications 18
   b. Full Papers Published in Conference Proceedings 19

H. INTERACTIONS 19

I. TRANSITIONS 20

J. FUTURE WORK 20

K. LITERATURE CITED 21

A. EXECUTIVE SUMMARY

A. EXECUTIVE SUMMARY

Sensitive and selective detection of dense non-aqueous phase liquids (DNAPLs), volatile organic compounds (VOCs), and other toxic compounds such as polychlorinated biphenyls (PCBs), furan and dioxin, is an area of continuing importance for the DOE. These classes of compounds are commonly found as pollutants at waste sites, and their presence and concentrations in soil and groundwater must be determined to direct remediation efforts and to provide post-remediation monitoring.

Two widely-accepted analytical methods for the detection of chlorinated organic compounds are negative ion chemical ionization mass spectrometry (NICI-MS) and gas chromatography with electron capture detection. Both of these techniques rely on the propensity of these compounds to form negative ions due to their large cross sections for capture of low-energy electrons *in their ground electronic state.* However, for compounds with smaller electron capture cross sections, including the PCB's with few chlorine atoms and non-chlorinated VOC's, these analytical methods are considerably less sensitive.

During the past three years, under a 1996 EMSP award, we have investigated a novel approach for the efficient generation of negative ions in a wide variety of compounds. This research program was based on recently-discovered physical phenomenon of enhanced electron capture by excited electronic states, in particular high-Rydberg states. Within the past three years, we have made significant progress in understanding the basic mechanisms involved and also illustrating the feasibility of the technique. In particular, we have shown that, (i) high-Rydberg states of molecules can be efficiently produced *using fixed frequency lasers and also using glow discharges*, (ii) these Rydberg states have long enough lifetimes for electron attachment to occur, and (iii) efficient negative ion formation can be achieved in compounds such as benzene and toluene that do not

undergo significant electron capture in their ground states (i.e., they cannot be detected with any significant sensitivity using the existing negative-ion-based analytical techniques).

B. RESEARCH OBJECTIVES

Present analytical methodologies for the detection of chlorinated compounds important to DOE's environmental restoration program, such as DNAPLs [dense non-aqueous phase liquids--such as carbon tetrachloride, trichloroethylene (TCE), perchloroethylene (PCE)], polychlorinated biphenyls (PCB), and others, involve detection by negative-ion-based analytical techniques. These techniques exploit electron attachment to *analyte molecules in their ground electronic states*, and are limited to particular compounds with appropriate electron capture cross sections (> about 10^{-17} cm^2). For example, PCB contamination is detected by analysis of mixtures of chlorinated homologues of these biphenyls. Homologues with lower numbers of chlorines do not efficiently attach thermal electrons and thus are not detected by either electron capture chromatographic detectors or by negative ion chemical ionization mass spectrometry.

We proposed three novel analytical techniques based on enhanced negative-ion formation via electron attachment to highly-excited electronic states of molecules.

In one of the proposed techniques, the excited states of the (analyte) molecules are populated via laser excitation; the resulting negative ions are mass analyzed for identification. The other two proposed techniques utilize a specialized gas discharge for the formation of excited species (and low-energy electrons for attachment), and thus will provide a cost-effective method if successful; in one version the negative ions will be mass analyzed --as in the laser-based technique-- and in the other the decrease in electron density due to excited state attachment will be monitored (electron capture detector mode). A plasma mixing scheme will be employed to excite the analyte molecules (they will not be directly subjected to the discharge) so that the excited states of the analyte molecules will not be destroyed by the discharge.

C. METHODS AND RESULTS

1. Methods (Approach)

Our approach is based on two novel concepts: (i) when a molecule is excited to an energy above its lowest ionization threshold, long-lived, core-excited Rydberg states are populated (in addition to the ionization of the molecule), and (ii) electron attachment to such core-excited Rydberg states (as well as "regular" Rydberg states) of molecules have many orders of magnitude enhancement in electron attachment compared to the corresponding ground state molecules. We have explored two methods for achieving molecular excitation and subsequent electron capture: one is to use fixed frequency lasers, and the other is to use a glow discharge.

Due to the novelty of the concepts involved, we will first describe these ideas in this section. Then the current status of research (progress achieved during the past three years) will be described in Section C.2.

a. Rydberg States of Molecules

Rydberg states of atoms and molecules are electronically-excited states where the excited electron is weakly bound to the ion core (i.e., located close to the ionization threshold) and thus its binding energy (E) can be approximately given by the Rydberg formula,

$$E = -\frac{R}{(n-\delta)^2} \qquad (1)$$

where, n is the principal quantum number, δ is the quantum defect, and R is the Rydberg constant; for small d values the formula resembles that for a hydrogen atom. Most properties of Rydberg states vary rapidly with n, typically as an integer power on n [1,2]. Some typical properties are summarized in Table I.

Therefore, high-Rydberg states (those with high n values; normally n>20) have properties that are radically different from the low-lying states. They have large geometric cross sections, long lifetimes, and small binding energies; due to the latter factor, they can be ionized by small electric

fields. Due to their large polarizabilities, which vary as n^7 [3], they also have extremely large cross sections for interactions with *charged particles* [1]. However, interactions with neutral, non-polar species is very weak, as was first pointed out by Fermi [4]. His work followed the experimental work by Amaldi and Segre [5] who measured the shifts of Rydberg energy levels of alkali atoms at densities such that about ten thousand rare gas atoms were contained within the Rydberg orbit. This implied that the collisional ionization of the Rydberg states was small.

An electron in a Rydberg orbital is located far away from the core, and therefore the "core effects" are minimal for high Rydberg states: Except for minor differences, High-Rydberg states of atoms and molecules in general have similar properties [1,6]. Recently, hydrogen-like Rydberg states with $n > 100$ have been observed in large molecular clusters [7]. Thus, we can expect the large cross sections for electron attachment to Rydberg states to be of common occurrence; this has been confirmed by our studies up to now; see Section C.2..

Table I. Selected properties of Rydberg states with n=1 and n=100.

Property	n-Dependence	n=1	n=100
Mean radius (cm)	$\approx 5.3 \times 10^{-9}\, n^2$	5.3×10^{-9}	5.3×10^{-5}
Binding energy (eV)	$\approx 13.6\, n^{-2}$	13.6	10^{-4}
Lifetime (s)	$\approx n^4 \times 10^{-10}$ ($\ell \approx n$)	3×10^{-9} (n=2)	10^{-2}
Threshold Ionization Field (V/cm)	$\approx 10^9/n^4$	10^9	10

If the excited electron is in a Rydberg state and the ion core is vibrationally/rotationally excited, then one has a core-excited Rydberg state; see Fig. 1. Since the total energy of such a state is higher than the ionization potential of the molecule, it is energetically possible for the molecule to ionize by transferring core energy to the Rydberg electron. Such an autoionization process had been assumed to be fast (ps time scale); however, recent studies [8-10] have shown that such core-excited states can be long lived as "regular" Rydberg states as long as the ion core is stable [11]. We have shown that such states can be easily produced using fixed frequency lasers or glow discharges; see the progress report in Section C.2.

b. Enhanced Electron Attachment to Rydberg States of Molecules

Electron attachment to molecules in their **ground electronic states** has been studied for almost a century [12]. We reported the first observation of electron attachment to **electronically-excited molecules** in 1987 with the measurement of electron attachment to the first excited triplet state of thiophenol [13,14]; the rate constant for electron attachment was shown to about 5 orders of magnitude higher compared to the ground state of thiophenol [14]. Since then we [15,16] and

others [17-23] have reported enhanced rate constants for electron attachment to low-lying electronically-excited states of a variety of molecules. As we point out below, dissociative electron attachment is enhanced with the increasing internal energy of a molecule. Subsequently, we observed extremely large rate constants in the range of 10^{-7} - 10^{-3} cm^3s^{-1} for electron attachment to a wide variety of molecules excited to energies above their ionization thresholds [24-31]. *During the past three years* we have conducted studies to show that the enhanced electron attachment in these cases is due to **core-excited high-Rydberg states**; see Section C.1.a.

Dissociative electron attachment to a molecule AB *(polyatomic in general)* of internal energy E can be represented as a two-step process,

$$AB(E) + e^-(\varepsilon) \xrightarrow{\sigma_c} AB^{-**} \xrightarrow{p} A^- + B \,, \qquad (2)$$

where, σ_c is the cross section for the capture of an electron of energy e to form the transient parent anion AB^{-**} which subsequently dissociates with probability p to form the fragment anion A^- and *one or more neutral fragments.*

The dissociative attachment cross section, σ_{da}, is thus given by,

$$\sigma_{da} = \sigma_c \times p \qquad (3)$$

The capture cross section, σ_c, is enhanced greatly for highly-excited states due to the enhanced polarization interaction. For electron-molecule interactions, the polarization potential, V_{pol}, is given by,

$$V_{pol} = -\frac{\alpha e^2}{8\pi\varepsilon_0 r^4} \qquad (4)$$

where α is the molecular polarizability, e is the electron charge, and r is the distance between the electron and the molecule. Vogt and Wannier [32] showed that the quantum mechanical capture cross section is given by,

$$\sigma_c = 4\pi a_0^2 \left(\frac{\alpha}{2\varepsilon}\right)^{1/2} \qquad (5)$$

where a_0 and ε are the Bohr radius and the energy of the attaching electron respectively; all are in

atomic units.

Even though polarizabilities of highly-excited molecular states have not been reported to our knowledge, those for High-Rydberg states of several atoms have been reported [33-37]. From these measurements, $\alpha \approx n^7$ where α is in atomic units, and n is the principal quantum number. The above relationships can be combined to yield (also, see [38]),

$$\sigma_{da} = 13p\times10^{-16}\sqrt{\frac{n^7}{\varepsilon}} \qquad (6)$$

where ε is in eV and σ_{da} is in cm^2. This leads to an energy-independent electron attachment rate constant, k_{da}, of $\approx 8p \times 10^{-8}\, n^{7/2}\, cm^3s^{-1}$. However, as the energy of the attaching electron is increased, the ability of the Rydberg electron to respond to the field of the incoming electron is decreased, and thus the above formula for the rate constant should be valid only for low electron energies.

Due to the large internal energy of the transient parent negative ion in Eq. (2) in the case of attachment to a Rydberg molecule, it can be expected to dissociate rapidly [29,38]. For the following discussion, we assume a value of 0.1 for p. This yields a k_{da} of $\approx 10^{-8}\, n^{7/2}\, cm^3s^{-1}$, which can be expected to be correct within an order of magnitude. *(For ground state atoms and molecules, the effective range of electron-molecule interaction is small compared with the electron de Broglie wavelength for slow electrons, and thus the s-wave scattering cross section has been taken to be an upper limit for electron scattering cross sections. However, this limit does not apply for highly-excited states due to their large polarizabilities which increase the electron-molecule interaction range, also see [29,38].)* For example, the k_a value for a high-Rydberg state with n=50 would be . $10^{-3}\, cm^3s^{-1}$; in comparison, the k_a values for ground state molecules are, on the average, $\approx 10^{-10}\, cm^3s^{-1}$ with the maximum values being around$10^{-6}\, cm^3s^{-1}$ for strong attachers like SF_6. Rydberg states of atoms and molecules have been shown to possess extremely large cross sections for various collision processes; see for example, [1,2]. However, our studies are the first on electron attachment to Rydberg states of molecules.

The dissociative electron attachment process, depicted in Eq. 2, is energetically possible when,

$$E + \varepsilon > D(AB) - EA(A)\ , \qquad (7)$$

where D(AB) is the dissociation energy of AB, and EA(A) is the electron affinity of A. Dissociation energies of molecules are usually $\approx$ 5 eV; EA is positive for atoms or molecular fragments that form stable negative ions; ionization thresholds of molecules are almost always higher than 7 eV, and thus for Rydberg states, E > 7 eV (see Fig. 1. Core-excited Rydberg states of molecules have even higher energy; see Fig. 2). Therefore, the left hand side of Eq. 7 is at least 2 eV greater than the right hand side. Hence **electron attachment to Rydberg states of molecules lying close to their ionization**

thresholds is energetically possible at any electron energy, including thermal energy electrons for which the capture cross sections are quite large. So far, we have observed enhanced electron attachment to all the molecules that we have investigated [24-26,27-31], except for N_2; the electron affinity of the N atom is negative [39].

Just by having a large internal energy does not guarantee electron attachment. The excited state must live long enough for the electron to be captured. Fortunately, the high-Rydberg states do have characteristically-long lifetimes [1,6]; also see Table I. Recently, it has been shown [8-10] that even the core-excited High-Rydberg states (produced via excitations to energies above the ionization thresholds) have lifetimes in the microsecond range; see the progress report below.

The high efficiency associated with the newly discovered electron attachment process was recently illustrated when it was shown to be responsible for laser action in aluminum [40]. As in the case of many new research areas, this highly-efficient electron attachment process appears to have applications in a variety of basic and applied areas. So far, in addition to laser emission in aluminum mentioned above, applications in the following areas have been pointed out:

(i) negative-ion and neutral beam technologies [38,41],
(ii) plasma remediation of toxic compounds [42,43],
(iii) plasma processing of materials [29,44],
(iv) continuous UV laser [45], and
(v) corona stabilization in gaseous dielectrics [46].

2. Techniques and Results

During the past three years, we have, (i) conducted basic studies to clarify the electron attachment mechanisms involved in molecules laser excited to energies above their IPs [9,11,30,38,47], (ii) illustrated that intense negative ion mass spectra can be generated in benzene and toluene [48,49] which generate negative ions weakly using conventional methods, and (iii) designed and conducted experiments to show that glow discharges can be used to used excite molecules and to achieve subsequent efficient negative ion generation [31,38,44,50]. As a result of these studies, we now better understand the basic electron attachment mechanisms involved and thus how best to utilize

this knowledge in several possible analytical instruments.

a Laser Studies

We first conducted a series of experiments to understand the basic electron mechanisms involved when a molecule is laser excited to an energy above its IP. Our previous experiments [24,25] had provided evidence to show that the negative ion formation was not due to ion-pair formation, and that it was due to an electron attachment process. Since all of the molecules where we had observed efficient negative ion formation did not attach electrons their ground states, we concluded that some type of a long-lived excited state must have been formed when the molecules were excited to an energy above their IPs. The logical candidates were high-Rydberg states which normally have long lifetimes and large cross sections for various collision processes [1,2]. (However, studies on electron attachment *by Rydberg states of molecules* had not been conducted, even though electron capture *by electronegative molecules from atomic Rydberg states* has been well known; see [51] and references therein).

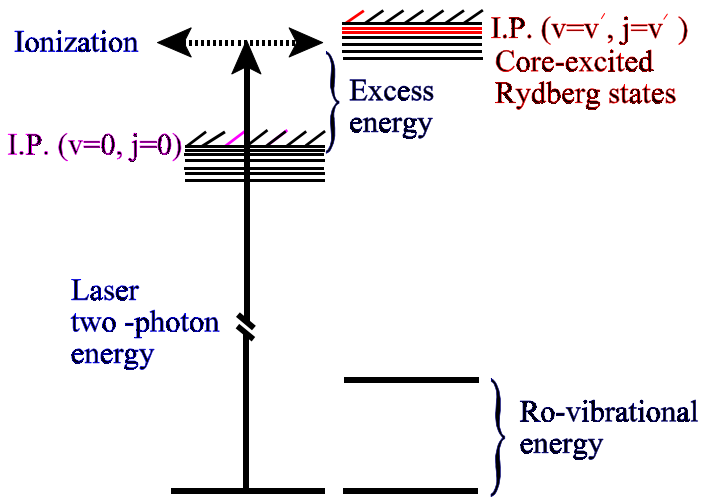

Fig. 1. A schematic diagram showing the continuum-discrete interactions which lead to the formationof core-excited Rydberg states; v and j denote vibrational and rotational states.

We had proposed the following sequence of events to explain the efficient negative ion formation in molecules laser excited to energies above their IPs [29]: when a laser pulse induced transitions of a molecule to an energy above the ionization threshold, a significant fraction of these

transitions led to the indirect formation of high-Rydberg states; these long-lived states in turn attached electrons that were concomitantly produced via molecular ionization; see Fig. 1.

It had been generally believed that molecules excited to energies above their IPs should either ionize or undergo fast (sub-nanosecond) dissociation. However, our experiments showed that, (i) significant fraction of excitations end up in neutral excitations where the excited electron is in a bound Rydberg state with the ion core carrying the "excess energy" (see Fig. 1), and (ii) these "superexcited" neutral states can live long enough to attach electrons and in some cases have lifetimes of several microseconds, see below.

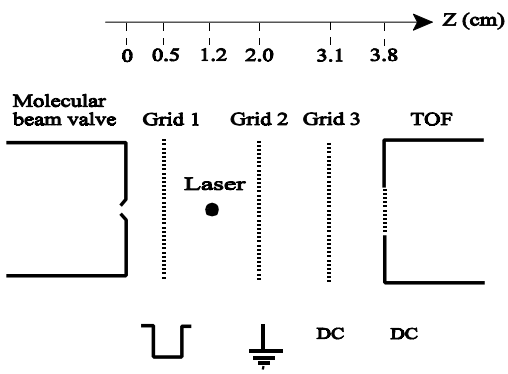

Fig. 2. The grid arrangement for the TOF experiments of [9,11].

We employed a pulsed molecular beam/time-of-flight mass spectrometer (TOF) arrangement to study the dynamics of the highly-excited states produced via laser excitation of molecules to energies above their lowest IPs [9,11]. The heart of the experimental arrangement [9] is shown schematically in Fig. 2 (the complete apparatus is shown in Fig. 3); this is a variation of the previous Mass Analyzed Threshold Ionization (MATI) technique [52] that had been developed for the Zero Electron Kinetic Energy (ZEKE) studies [6]. The pulsed molecular beam was intercepted by a laser beam in the laser interaction region located between grids #1 and #2.

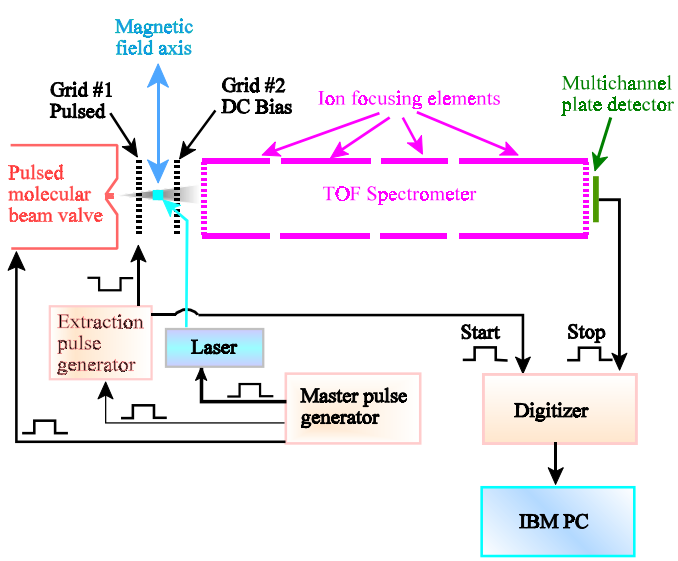

Fig. 3. The TOF appaatus.

The gas jet carried the positive ions and neutral excited species produced by the laser pulse to the extraction region between the grids #2 and #3. A voltage pulse with amplitude ranging from 70 to 120 V was applied to grid #2 after a given time delay from the laser pulse. This voltage pulse served two purposes: (i) it ionized the high-Rydberg states present in the extraction region at that time, and (ii) it pushed out both the **direct ions --those produced via direct ionization in the interaction region**--and **the ions produced in the extraction region via field ionization of the high-Rydbergs,** into a time-of -flight (TOF) mass spectrometer for mass analysis. By keeping the positive bias voltage on grid #2 above a certain threshold value, the direct ions could be prevented from entering the extraction region. Thus, the ion signal observed with a bias voltage above this cut-off value was due to the field ionization of neutral high-Rydberg states in the extraction region by the voltage pulse.

Data for benzene at the KrF laser line are shown in Fig. 3 [9]. These figures show TOF spectra at different time delays of the ionization/extraction pulse with respect to the laser pulse. For time delays up to several μs there was no signal because the direct ions/High-Rydbergs took that much time to move from the interaction region to the extraction region. The data taken for **a zero bias voltage** on grid #2 are shown in Fig. 3(a). The direct ions as well as the high-Rydbergs moved with the same velocity distribution of the gas jet, and hence the two signals were merged in this case. The signal profile was primarily determined by the velocity distribution of the gas jet.

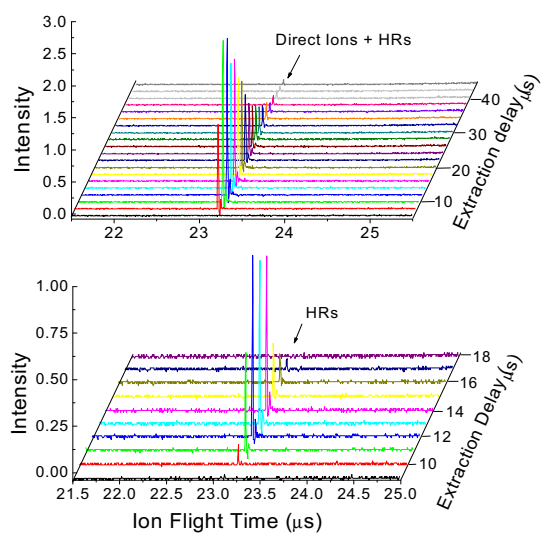

Fig. 4. Time-of-flight spectra for benzene. (a) data for zero bias voltage on grid #2. (b) data for bias voltage of +1 V on grid #2 [20].

From the data of Fig. 4(a), we estimate that the direct ions can be stopped by applying a bias voltage of +0.4V to grid #2 [9]. Figure 4(b) shows data for +1 V bias voltage applied to grid #2. Note that this bias field would have field-ionized High-Rydbergs with the principal quantum number, $n \leq 150$; also, the pulsed voltage of 90 V used correspond to a field ionized High-Rydberg signal for states with $n \geq 50$. Therefore, the states detected in this experiment had $50 \leq n \leq 150$. It is clear from Fig.3(b) that these neutral superexcited high-Rydberg states have lifetimes exceeding 10 μs; it is unlikely that any collisional stabilization could occur at pressures of the order of 10^{-4} Torr estimated in the laser interaction region [9]. It is surprising to see that significant fraction (10%-20%) of the excitations lead to the formation of these long-lived superexcited high-Rydberg states.

Therefore, the two-photon excitation of benzene at the KrF laser line leads to the formation of long-lived high-Rydberg states in addition to direct ionization.

$$C_6H_6 \quad + \quad 2h\nu \quad \rightarrow \quad \begin{array}{lll} C_6H_6^{+} & + \quad e^{-} & (direct\ ionization) \quad (8a) \\ C_6H_6^{**} & & (HR\ formation) \quad (8b) \end{array}$$

The core-excited High-Rydberg state that is produced via (8b) is essentially a "ZEKE state" where the excited electron is in a high-Rydberg state and the excess energy of ≈ 0.75 eV is in the vibrational energy of the ion core, see Fig. 1 (two-photon energy of the KrF line = 10 eV, ionization threshold of benzene = 9.25 eV [53]). Such transitions seems to be of common occurrence even if the Franck-Condon factors for such transitions in general are expected to be small. Evidence for neutral long-lived states lying well above the IP of benzene [8] and NO_2 [10] had been reported in ZEKE experiments. We had observed indirect evidence for such states in a number of molecules in our previous electron attachment studies on laser excited molecules; see [29,54] and references therein. Therefore, the population of these long-lived superexcited states (or, core-excited Rydberg states) seems to be of common occurrence. **These can be viewed as transitions to the ionization continuum followed by the capture of the outgoing electron into a high-Rydberg state; in this**

capture process the excess kinetic energy of the electron is converted to excitation of the core.

It is the inverse process to vibrational autoionization of high-Rydberg states, see Ref. 10 of [55].

It turns out that the stability of the core-excited High-Rydberg state produced via the above described process depends on the stability of the rovibrationally-excited core: If the core of the superexcited high-Rydberg state can retain this "excess energy" without dissociating, then it behaves like a regular ZEKE state with characteristically-long lifetimes [9]. On the other hand, if the core is unstable, it can dissociate rapidly; in some cases, the Rydberg electron -- which is merely a spectator to the core dissociation process -- can hold on to one of the fragments thus forming a fragment (or daughter) Rydberg state [11].

The production of electrons and long-lived high-Rydberg states concomitantly by molecular excitation, together with the extremely large electron attachment cross sections associated with high-Rydberg states, lends to a simple method for negative ion formation: the laser wavelength does not matter much, as long as transitions to energies above the IP can be attained. We observed **enhanced negative ion formation** via electron attachment to core-excited high-Rydberg states of benzene using the same TOF apparatus of Fig. 3 [48]. In order to observe negative ions, grid #2 was grounded and a negative voltage pulse was applied to grid #1 to extract the negative ions produced by the laser pulse. *In addition to attaching space-charge trapped electrons*, the high-Rydberg states attached electrons from other nearby high-Rydberg states [47]; this is quite similar to what happens in the technique developed by Dunning and co-workers to measure the capture of weakly-bound Rydberg electrons from high-Rydberg states of atoms by molecular ground states, see for example, [51]. **In our case** [47]**, however, a Rydberg electron is attached by another Rydberg molecular state** (benzene does not capture electrons significantly in its ground electronic state [45,56]).

In recent experiments, we have uncovered a phenomenon that enhances the usefulness of this technique for possible analytical applications as well as confirms the basic mechanism of negative ion formation: The negative ion formation was observed to be further enhanced in the presence of a small electric or magnetic field [49]; this enhanced signal was shown to be due to filed-induced lifetime lengthening of the high-Rydberg states [49]. Lengthening of the lifetimes of the high-Rydberg states due to small external fields has been reported in ZEKE studies [57,58]. The effect of a 20 Gauss magnetic field on the negative

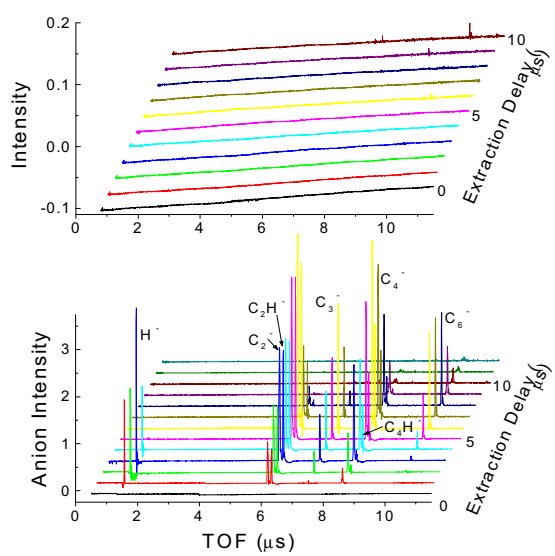

Fig. 5. Negative ion signal from ArF laser irradiated benzene in the presence of (a) 0, and (b) 20 Gauss magnetic field [58].

ion signal is shown in Fig. 5 [49]. The ArF laser flunce for these spectra was 15 $mJcm^{-2}$. In order to observe negative ions without the magnetic field, higher laser fluences were needed.

The laser induced negative ion formation may be further enhanced by providing extra electrons for attachment. We have built a high-current (>1 μA above 0.5 eV) simple electron gun (with ≈1 eV resolution) to provide external electrons for electron attachment. We are testing this new electron gun at the time of this writing.

b. Gas Discharge Studies

As proposed in the 1996 EMSP proposal, we have devised a novel method for the excitation of highly-excited states of molecules for electron attachment studies using a gas discharge. The basic idea is to achieve molecular excitation via excitation transfer from the metastable states of rare gases that are efficiently produced in glow discharges. The following distinct characteristics of inert gases make this possible:

- In a typical inert gas plasma, the relative density of metastable to ground-state atoms is $\approx 10^{-4}$, while the degree of ionization with respect to ground-state population is only $\approx 10^{-5}$ [69].
- The rare-gas metastables have relatively high energies lying close to the ionization thresholds of molecular gases (see Table II).

Table II. Energies and lifetimes of the metastable states of inert gases [60].

INERT GAS	STATE	ENERGY(eV)	LIFETIME(s)
He	2^1S_2 2^3S_1	20.6 19.8	0.02 8000
Ne	3^3P_0 3^3P_2	16.7 16.6	430 24
Ar	4^3P_0 4^3P_2	11.7 11.5	45 56
Kr	5^3P_0 5^3P_2	10.6 9.9	0.49 85
Xe	6^3P_0 6^3P_2	9.5 8.3	0.1 149

- The metastable states of inert gases have long lifetimes, see Table II. Even at an ambient pressure of 10 Torr, their lifetimes are long enough for them to carry the excitation distances of tens of cm [61]. Therefore, they can act as energy reservoirs and transfer excitation energies over long distances.

- Even though the "inert" gases are chemically inert in their ground states, they are highly reactive in their excited metastable states. The cross sections for excitation transfer from rare gas metastable states to a wide variety of molecules lie in the range of ~10^{-16} to ~10^{-14} cm^2 [61-63].

The apparatus that we built to test the idea of producing high-Rydberg states via excitation transfer from the metastable states of inert gases is shown in Fig. 6 (the mass spectrometer shown in the figure is for the proposed studies). In this "plasma mixing" method, metastable states produced in a DC glow discharge in the "source region" were transferred to an adjoining "target region" in a flow apparatus; in the "target region", the extracted plasma was mixed with a target molecular gas. Excited states of the target gas, produced via excitation transfer, efficiently attached electrons that were also carried to the target region by the gas flow. An axial magnetic field of ≈ 150 Gauss was used to collimate the electrons. *The molecular gas was fed into the target region, and thus was not directly subjected to the discharge*.

Depending on the molecular gas used in the target region, an appropriate inert gas can be chosen to be used in the discharge region so that highly-excited states of the molecules just below or above the ionization potential can be populated. If we denote the metastable state energy of the rare gas, (R. G.), by E, and the ionization threshold of the reactive molecule (AB) by I, then for E > I,

$$R.G.^*(E) + M \rightarrow M^+ + e^- + R.G. \qquad (9a)$$

$$\rightarrow M^{**}(HR) + R.G. \qquad (9b)$$

where M^{**}(HR) is a core-excited high-Rydberg state of M. The process (9a) above is referred to as Penning ionization. *Depending on the relative magnitudes of the ionization threshold of M and the metastable energy of the rare gas, ionization or excitation of M will dominate. For large values of (E-I) ionization of M will dominate.*

Now, in the case of E < I, the excitation transfer will directly yield High-Rydberg states of M,

$$R.G.^*(E) + M \rightarrow M^*(HR) \qquad (10)$$

In the case of E < I efficient excitation transfer will occur only if the density of excited states of M is high at the energy of the metastable state since the excitation transfer is a resonant process [61,63]; for polyatomic molecules this condition is usually satisfied if $|(I - E)|$ is a few eV.

Therefore, a high-Rydberg, HR (M^*), states of a given molecule can be produced by choosing an appropriate inert gas (ionization potentials of molecules normally lie in the range of 7 to 15 eV [64] and those of interest to this program have ionization potentials below ~ 13 eV; see Table II for energies of the metastable states of inert gases). In fact, Ar with a metastable state energy of ~ 11.5 eV could be used almost exclusively for the molecules of interest to this program since Ar is fairly inexpensive.

It must be noted that we came up with this idea in 1996 based on a report of efficient H^- and CH_3 radical formation in CH_4 by a Japanese research team [65-67] in a plasma mixing apparatus on which we based our apparatus shown in Fig. 6. They had explained their observations as follows: (i) the H^- formation was attributed [65] to enhanced electron attachment to vibrationally-excited H_2 produced via the reaction, $CH_4 + e^- \rightarrow CH_2 + H_2 + e^-$, and (ii) the CH_3 formation was attributed [67] to the reaction $CH_4 + e^- \rightarrow CH_3 + H + e^-$. However, it is unlikely that substantial dissociation of CH_4 occurred in the "target region" (see Fig. 6) where the electron temperature was shown to be < 0.5 eV [66]; the threshold electron energy for dissociation of CH_4 is ≈ 10 eV [64]. Furthermore, H^- production was shown [65] to be enhanced when the pin-hollow cathode [66] was operated to yield low-energy electrons. At that time, we pointed out [69] that highly-excited states of CH_4 can be populated in the target region by excitation transfer from Ar metastable states (Reaction (10)) above, and these states can attach electrons dissociatively to yield both H^- and CH_3, i.e., $CH_4^{**} + e^- \rightarrow CH_3 + H^-$.

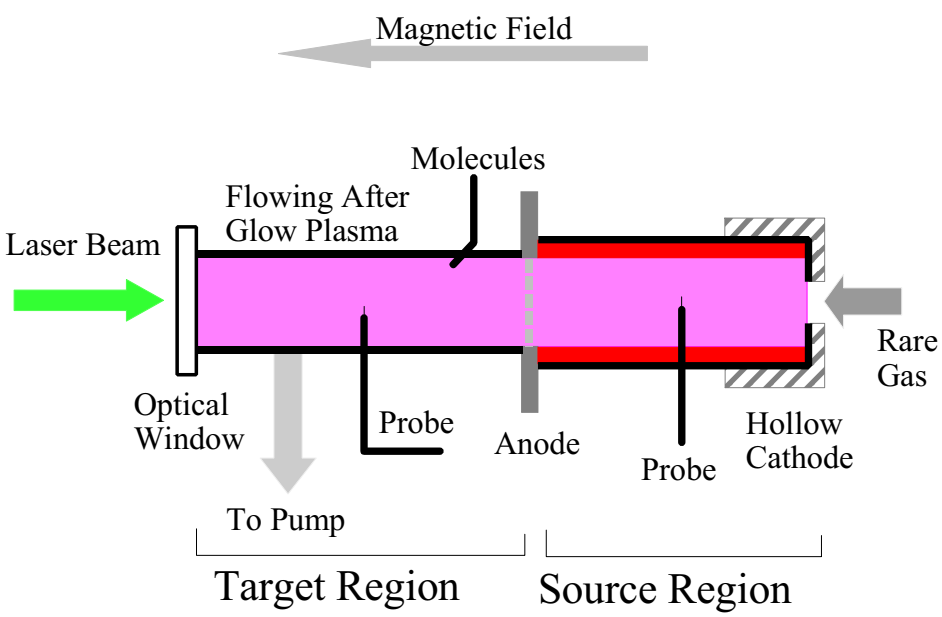

Fig. 6. Plasma mixing apparatus.

We have confirmed [44,50] the validity of our proposed mechanism by studying a number of rare gas/molecular gas combinations, including the Ar/CH_4 combination used by Iizuka et al. [75]. In the initial experiments [44,50], a Langmuir probe was used to monitor the electron density in the target region. We showed that the electron density in the target region increased for the cases where E > I; see Eq. (9a). But when E < I, the electron density decreased due to the capture of the electrons by the excited states of molecules produced via excitation transfer.

However, even in the case of E > I, negative ion formation still occurred due to electron capture by the core-excited Rydberg states, even though the loss of electrons was masked by the generation of electrons due to Penning ionization. We illustrated the formation of O^- ions for the Ar/NO combination by photodetaching the O^- ions using a laser [38]. In this case, core-excited NO^*

states of NO lying above the ionization threshold (~9.3 eV) were produced by excitation transfer from Ar^m; see Eq. 9(b). The cross sections for excitation transfer from Ar^m to NO are of the order of 10^{-15} cm^2 [63]. The low-energy electrons present in the target region (carried by the gas flow from the discharge region) attached dissociatively to NO^*, leading to the formation of O^- ions. The production of O^- ions in the target region was verified in a photodetachment experiment [38].

It must be noted that dissociative electron attachment to NO molecules in their *ground electronic state* occurs for electron energies between ≈7 and ≈11 eV with a maximum cross section of ≈10^{-18} cm^2 [70]; in our experiments, the electron temperature in the target region was only ≈ 1 eV. Therefore, the O^- formation could not have been due to electron attachment to ground state NO [38]. On the other hand, we have also observed [27] efficient O^- formation in ***laser-excited*** high-Rydberg states of NO.

Note: We selected NO for the above study because it produces the O^- ion by attachment which then can be monitored using a photodetachment experiment; i.e., this was a "proof-of-principle" experiment. In this proposal we request funds for a quadrupole spectrometer, so that we can observe negative ions due to the polyatomic molecules of interest to the EMSP program.

In addition to the plasma mixing scheme, we also investigated a *pulsed glow discharge method* for producing negative ions. It had been known that efficient H^- formation can be achieved in a pulsed discharge of H_2 [71,72]. In the 1996 EMSP proposal, we had proposed to test the possibility that this was due to the production of high-Rydberg states during the pulsed "on" time, which live well into the afterglow to capture the low energy electrons in the afterglow [73]. In order to test this idea we conducted a pulsed discharge study on O_2 (It was difficult to obtain a H_2 discharge in our apparatus). We confirmed efficient production of O^- in the pulsed discharge by conducting a Langmuir probe-assisted laser photodetachment experiment [31]. By studying the dependence of the O^- yield on various experimental parameters such as pressure and pulse width, we presented evidence to show that the O^- formation was due to enhanced electron attachment to Rydberg states [31].

Therefore, we may be also able to produce negative ions of polyatomic molecules of interest to the EMSP program using this pulsed glow discharge technique. We can use the same quadrupole mass spectrometer that we requested for the plasma mixing experiments to observe the negative ion mass spectra from such polyatomic molecules.

D. RELEVANCE, IMPACT, AND TECHNOLOGY TRANSFER

Sensitive and selective detection of dense non-aqueous phase liquids (DNAPLS), volatile organic compounds (VOC) and other organics, such as polychlorinated biphenyls (PCB), is an area of continuing importance for the DOE EM program. These classes of compounds are commonly found as pollutants at waste sites, and their presence and concentrations in soil and groundwater must be determined to direct remediation efforts and to provide post-remediation monitoring.

Analytical techniques that employ negative ion based-detection are presently being used for the detection of chlorinated DNAPLs and PCBs. The existing techniques are suitable only for highly-chlorinated compounds with appropriate electron capture cross sections (> about 10^{-17} cm^2). Also, for PCBs with low numbers of chlorine atoms and VOCs, such as benzene and toluene, the detection by either electron capture chromatographic detectors or by negative ion chemical ionization

mass spectrometry is not sensitive. In order to expand the applicability of the negative ion based techniques, a new generation of analytical instruments need to be developed.

Our techniques are based on an entirely new concept of enhanced electron attachment to highly-excited states of molecules, which has been shown to occur in a wide variety of molecules with orders of magnitude larger cross sections compared to the corresponding ground states.

The potential benefits of the proposed research are improved sensitivity for the detection of DNAPLs, VOCs, PCBs, and other harmful compounds in soil and groundwater at contaminated DOE sites using a technology that could be field usable and more user friendly than the existing methods. Because this negative ion formation process is far more efficient than the most efficient negative ion formation processes that are currently being used, an overall gain in sensitivity is possible. Furthermore, this enhanced electron attachment process occurs in a wide variety of molecular species, and hence the proposed techniques will have wider applicability as well. We have illustrated the potential of this new approach during the past three years.

E. PROJECT PRODUCTIVITY

This project resulted in 11 peer-reviewed publications (Section G.a. below), 3 full papers at conferences (Section G.b. below), and 1 patent (Section J below).

F. PERSONNEL ASSOCIATED WITH THE PROJECT

Lal A. Pinnaduwage, Research Professor, Department of Physics, The University of Tennessee
Michelle V. Buchanan, Associate Division Director, Oak Ridge National Laboratory
Gregory B. Hurst, Staff Member, Oak Ridge National Laboratory

G. PUBLICATIONS

a. Peer-Reviewed Publications

1. L. A. Pinnaduwage and Y. Zhu, "Long-Time Stability of Superexcited High Rydberg Molecular States", Chem. Phys. Lett. **277**, 147 (1997).

2. L. A. Pinnaduwage, W. X. Ding, and D. L. McCorkle, "Enhanced Electron Attachment to Highly Excited Molecules Using a Plasma Mixing Scheme", *Appl. Phys. Lett.* **71**, 3634 (1997).

3. A. M. Mabel, S. H. Lin, and L. A. Pinnaduwage, "Potential Energy Surfaces of H_2^-", *Chem. Phys. Lett*. **285**, 114 (1998).

4. L. A. Pinnaduwage and Y. Zhu, "High Rydberg Fragment Formation via Core Dissociation of Superexcited Rydberg Molecules", *J. Chem. Phys*. **108**, 6633 (1998).

5. K. Nagesha and L. A. Pinnaduwage, "O^- Formation from O_2 via Rydberg-Rydberg Electron Transfer" *J. Chem. Phys.* **109**, 7124 (1998).

6. W. Ding, D. L. McCorkle, and L. A. Pinnaduwage, "Enhanced Negative Ion Formation by Electron Attachment to Highly-Excited Molecules in a Flowing Plasma", *J. Appl. Phys*. **84**, 3051 (1998).

7. L. A. Pinnaduwage, W. Ding, D. L. McCorkle, S. H. Lin, A. M. Mebel, and A. Garscadden, "Enhanced Electron Attachment to Rydberg States in Molecular Hydrogen Volume Discharges", *J. Appl. Phys.*, **85**, 7064 (1999).

8. W. Ding, L. A. Pinnaduwage, C. Tav, and D. L. McCorkle, "The Role of High Rydberg States in Enhanced O^- Formation in a Pulsed O_2 Discharge", *Plasma Sources Sci. Technol.*. **8**, 384-391 (1999).

9. L. A. Pinnaduwage, K. Nagesha, Y. Zhu, M. V. Buchanan, and G. B. Hurst, "Laser-Enhanced Negative Ion Mass Spectroscopy for Weakly-Electron-Attaching Species", *Int. J. Mass Spectrometry* **193**, 77-86 (1999).

10. K. Nagesha and L. A. Pinnaduwage, "Magnetic and Electric Field Induced Enhancements in Laser Induced Anion Formation", Chemical Physics Letters **312**, 19-27 (1999).

11. C. Tav and L. A. Pinnaduwage, "Dissociative Electron Attachment to Laser-Excited Benzene", J. Phys. D (Appl. Phys.) **33**, 2391-2397 (2000).

b. <u>Full Papers Published in Conference Proceedings:</u>

1. L. A. Pinnaduwage, "Implications of Electron Attachment to Highly-Excited States in Pulsed Power Discharges",Digest of Technical Papers of the 11th IEEE Pulsed Power Conference, (Eds. G. Cooperstein and I. Vitkovitsky) IEEE Publishing Services, New York, 1997. pp. 1048-1053.

2. L. A, Pinnaduwage, W. X. Ding, and D. L. McCorkle,"Enhanced Electron Attachment to Superexcited Rydberg States of Molecular Hydrogen Using a Plasma Mixing Scheme", Proceedings of the 1998 International Congress on Plasma Physics, Ed. By P. Pavlo, pp. 129-132 (1999).

3. L. A. Pinnaduwage, W. X. Ding, D. L. McCorkle, and C. Y. Ma, "Enhanced Electron Attachment to Highly-Excited Molecules and Its Applications in Pulsed Plasmas", Digest of Technical Papers of the 12th IEEE Pulsed Power Conference, IEEE Publishing Services, New York,

(in press,2000).

H. INTERACTIONS

1. "Long-Time Stability of Superexcited High Rydberg Molecular States", Y. Zhu and L. A. Pinnaduwage, 50th Annual Gaseous Electronics Conference, Madison, Wisconsin, October 6-9, 1997.

2. "Enhanced Electron Attachment to Superexcited Rydberg States of Molecular Hydrogen Using a Plasma Mixing Scheme", L. A, Pinnaduwage, W. X. Ding, and D. L. McCorkle, presented at the 1998 International Congress on Plasma Physics, Prague, Czech Republic, June 27- July 3, 1998.

3. "Novel Analytical Techniques Based on an Enhanced Electron Attachment Process", L. A. Pinnaduwage, M. V. Buchanan, and G. B. Hurst, presented at the Environmental Management Science Program Workshop, Chicago, IL, July 27-30, 1998.

4. L. A, Pinnaduwage, W. X. Ding, and D. L. McCorkle, "Enhanced Electron Attachment to Rydberg States in Molecular Hydrogen Volume Discharges", presented at the 1999 Centennial Meeting of the American Physical Society, March 20-26, Atlanta, GA, 1999.

5. W. X. Ding, L. A, Pinnaduwage, C. Tav, and D. L. McCorkle, "O^- Formation by Electron Attachment to High Rydberg States", presented at the 1999 Centennial Meeting of the American Physical Society, March 20-26, Atlanta, GA, 1999.

6. "Magnetic and Electric Field Induced Enhancements in Laser Induced Anion Formation", K. Nagesha and L. A. Pinnaduwage, 52nd Annual Gaseous Electronics Conference, Norfolk, Virginia, October 5-8, 1999.

7. "Dissociative Electron Attachment to Laser-Excited Benzene", C. Tav and L. A. Pinnaduwage, 52nd Annual Gaseous Electronics Conference, Norfolk, Virginia, October 5-8, 1999.

8. "Electron Attachment to Rydberg States and Its Implications for Low-Temperature Plasmas", 53rd Annual Gaseous Electronics Conference, Houston, Texas, October 24-27, 2000.

I. TRANSITIONS

This technology is not yet at a stage where it can be used in the field.

J. FUTURE WORK

This project was terminated in 2000.

K. LITERATURE CITED

1. R. F. Stebbings and F. B. Dunning, eds. *Rydberg States of Atoms and Molecules*, Cambridge University Press: Cambridge (1983).
2. T. F. Gallagher, *Rydberg Atoms*, Cambridge Unversity Press, Cambridge, (1994).
3. T. M. Miller and B. Bederson, "Atomic and Molecular Polarizabilities- A Review of Recent Advances", in *Advances in Atomic and Molecular Physics*, B. Bederson, Editor, Academic Press: New York (1977).
4. E. Fermi, Nuovo Cimento, **11**, 157 (1934).
5. E. Amaldi and E. Segre, Nuovo Cimento, **11**, 145 (1934).
6. E. W. Schlag, *ZEKE Spectroscopy*, Cambridge University Press, Cambridge, (1998).
7. R. Neuhauser, K. Siglow, and H. J. Neusser, "Hydrogenlike Rydberg Electrons Orbiting Molecular Clusters", Phys. Rev. Lett., **80**, 5089 (1998).

8. W. G. Scherzer, H. L. Selzle, E. W. Schlag, and R. D. Levine, "Long Time Stability of Very High Rydberg States of Vibrationally Excited Molecules", Phys. Rev. Lett., **72**, 1435 (1994).

9. L. A. Pinnaduwage and Y. Zhu, "Long-Time Stability of Superexcited High Rydberg Molecular States", Chem. Phys. Lett., **277**, 147 (1997).

10. H. Matsui, J. M. Behm, and E. R. Grant, "Photoselection and the Appearance of Franck-Condon-Forbidden Thresholds in the ZEKE spectrum of NO_2", Journal of Physical Chemistry A, **101**, 6717 (1997).

11. L. A. Pinnaduwage and Y. Zhu, "High-Rydberg Fragment Formation via Core Dissociation of Superexcited Rydberg Molecules", J. Chem. Phys., **108**, 6633 (1998).

12. H. S. W. Massey, *Negative Ions*. (Cambridge University Press, Cambridge, 1938).

13. L. G. Christophorou, S. R. Hunter, L. A. Pinnaduwage, J. G. Carter, A. A. Christodoulides, and S. M. Spyrou, "Optically Enhanced Electron Attachment", Phys. Rev. Lett., **58**, 1316 (1987).

14. L. A. Pinnaduwage, L. G. Christophorou, and S. R. Hunter, "Optically Enhanced Electron Attachment to Thiophenol", J. Chem. Phys., **90**, 6275 (1989).

15. T. Jaffke, R. Hashemi, L. G. Christophorou, E. Illenberger, H. Baumgartel, and L. A. Pinnaduwage, "Photoenhanced Dissociative Electron Attachment to SO_2", Chem. Phys. Lett., **203**, 21 (1993).

16. L. A. Pinnaduwage and P. G. Datskos, "A Novel Technique for Real-Time Monitoring of Electron Attachment to Laser-Excited Molecules", J. Chem. Phys., **104**, 8382 (1996).

17. C.-T. Kuo, Y. Ono, J. L. Hardwick, and J. T. Moseley, "Dissociative Attachment of Electrons to the $A^2\Sigma^+$ State of Nitric Oxide", J. Phys. Chem., **92**, 5072 (1988).

18. C. T. Kuo, J. L. Hardwick, and J. T. Moseley, "Low-Energy Electron Attachment to Excited Nitric Oxide", J. Chem. Phys., **101**, 11084 (1994).

19. C. T. Kuo, J. L. Hardwick, and J. T. Moseley, "A Simple Kinetic Model of Ion Production and Loss in the Laser Excitation of Nitric Oxide", J. Chem. Phys., **104**, 3405 (1996).

20. R. S. Mock and E. P. Grimsrud, "Optically Enhanced Electron Capture by p-Benzoquinone and Its Methylated Derivatives", J. Phys. Chem., **94**, 3550 (1990).

21. R. L. Gordon, D. R. Sieglaff, G. H. Rutherford, and K. L. Stricklett, "Optically Enhanced Electron Attachment by p-Benzoquinone", International Journal of Mass Spectrometry and Ion Physics, **164**, 177 (1997).

22. E. Krishnakumar, S. V. K. Kumar, S. A. Rangwala, and S. Mitra, "Excited State Dissociative Attachment and Couplings of Electronic States of SO_2", J. Phys. B, **29**, L657 (1996).

23. E. Krishnakumar, S. V. K. Kumar, S. A. Rangwala, and S. K. Mitra, " Dissociative Attachment Cross Sections for Excited and Ground Electronic States of SO_2", Phys. Rev. A, **56**, 1945 (1997).

24. L. A. Pinnaduwage, L. G. Christophorou, and A. P. Bitouni, "Enhanced Electron Attachment to Superexcited States of Saturated Tertiary Amines", J. Chem. Phys., **95**, 274 (1991).

25. L. A. Pinnaduwage and L. G. Christophorou, "H- Formation in Laser-Excited Molecular Hydrogen", Phys. Rev. Lett., **70**, 754 (1993).

26. L. A. Pinnaduwage and D. L. McCorkle, "Mass Identification of Negative Ions in Excimer-Laser-Irradiated Triethylamine: Atomic Rearrangements in Electron Attachment to Highly-Excited States", Chem. Phys. Lett., **255**, 410 (1996).

27. L. A. Pinnaduwage and L. G. Christophorou, "Enhanced Electron Attachment to Superexcited States of Nitric Oxide", Chem. Phys. Lett., **186**, 4 (1991).

28. L. A. Pinnaduwage, M. Z. Martin, and L. G. Christophorou, "Enhanced Negative Ion Formation in ArF-Laser-Irradiated Methane: Possible Implications for Plasma Processing Discharges", Contrib. Plasma Phys., **35**, 433 (1995).

29. L. A. Pinnaduwage and P. G. Datskos, "Electron Attachment to Excited States of Silane: Implications for Plasma Processing Discharges", J. Appl. Phys., **81**, 7715 (1997).

30. L. A. Pinnaduwage, P. G. Datskos, and C. Tav, "Electron Attachment to Photofragments and Rydberg States in Laser-Irradiated CCl_2F_2", J. Appl. Phys., **84,** 3442 (1998).

31. W. X. Ding, L. A. Pinnaduwage, C. Tav, and D. M. McCorkle, "The Role of High-Rydberg States in Enhanced O^- Formation in a Pulsed O_2 Discharge", Plasma Sources Sci. Technol., **8**, 384 (1999).

32. E. Vogt and G. H. Wannier, "Scattering of Ions by Polarization Forces", Phys. Rev., **95**, 1190 (1954).

33. C. Fabre and S. Haroche, "Observation of Giant Polarizabilities in Atomic Sodium Rydberg States", Opt. Comm., **15**, 254 (1975).

34. A. F. J. van Raan, G. Baum, and W. Raith, "Measuremnt of the Scalar Polarizability of Very Highly-Excited States of Caesium", J. Phys. B, **9**, L349 (1976).

35. M. S. O'Sullivan and B. P. Stoicheff, "Scalar and Tensor Polarizabilities of ^{2}D Rydberg States in Rb", Phys. Rev. A, **33**, 1640 (1986).

36. P. P. Herrmann, J. Hoffnagle, N. Schlumpf, V. L. Telegdi, and A. Weis, "Measurement of Tensor Polarizabilities of the 40D and 60D States of Caesium", J. Phys. B, **19**, 535 (1986).

37. S. Gu, S. Gong, B. liu, J. Wang, Z. Dai, T. Lei, and B. Li, "Experimental Study of Caesium Atom n $^2P_{3/2}$ Rydberg State Polarizabilities by Doppler-Free Resonantly Enhanced Two-Photon Technique", J. Phys. B, **30**, 467 (1997).

38. L. A. Pinnaduwage, W. Ding, D. M. McCorkle, S. H. Lin, A. M. Mebel, and A. Garscadden, "Enhanced Electron Attachment to Rydberg States in Molecular Hydrogen Discharges", J. Appl. Phys., **85**, 7064 (1999).

39. H. Hotop and W. C. Lineberger, "Binding Energies in Atomic Negative Ions", J. Chem. Phys. Ref. Data, **4**, 539 (1975).

40. J. F. Kielkopf, L. A. Pinnaduwage, and L. G. Christophorou, "Lasing in Al Following Photoionization and Neutralization in the Presence of H_2: The Role of H^-", Phys. Rev. A, **49**, 2675 (1994).

41. L. A. Pinnaduwage and L. G. Christophorou, "Verification of H^- Formation in Ultraviolet-Laser-Irradiated Hydrogen: Implications for Negative Ion and Neutral Beam Technologies", J. Appl. Phys., **76**, 46 (1994).

42. D. M. McCorkle, W. X. Ding, C. Y. Ma, and L. A. Pinnaduwage, "Dissociation of Benzene and Methylene Chloride Based on Enhanced Dissociative Electron Attachment to Highly-Excited Molecules", J. Phys. D, **32**, 46 (1999).

43. D. M. McCorkle, W. X. Ding, C. Y. Ma, and L. A. Pinnaduwage, "Dissociation of Benzene in a Pulsed Glow Discharge", J. Appl. Phys., **86**, 3550 (1999).

44. W. X. Ding, D. M. McCorkle, and L. A. Pinnaduwage, "Enhanced Formation of Negative Ions by Electron Attachment to Highly-Excited Molecules in a Flowing Afterglow Plasma", J. Appl. Phys., **84**, 3051 (1998).

45. L. A. Pinnaduwage, "Gas Laser with Dual Plasma Mixing", US Patent No. 5,892,788 (1999).

46. L. A. Pinnaduwage and L. G. Christophorou, *A Possible New Mechanism Involved in Non-Uniform Field Breakdown in Gaseous Dielectrics*, in *Gaseous Dielectrics VII*, L. G. Christophorou and D. R. James, Editors. 1994, Plenum Press: New York. p. 123.

47. K. Nagesha and L. A. Pinnaduwage, "O^- Formation from O_2 via Rydberg-Rydberg Electron Transfer", J. Chem. Phys., **109**, 7124 (1998).

48. L. A. Pinnaduwage, K. Nagesha, Y. Zhu, M. V. Buchanan, and G. B. Hurst, "Laser-Enhanced Negative Ion Mass Spectrometry for Weakly-Electron-Attaching Species", International Journal of Mass Spectrometry, **193**, 77 (1999).

49. K. Nagesha and L. A. Pinnaduwage, "Magnetic and Electric Field Induced Enhancements in Laser Induced Anion Formation", Chem. Phys. Lett., **312**, 19 (1999).

50. L. A. Pinnaduwage, W. Ding, and D. L. McCorkle, "Enhanced Electron Attachment to Highly-Excited Molecules Using a Plasma Mixing Scheme", Appl. Phys. Lett., **71**, 3634 (1997).

51. C. D. Finch, R. Parthasarathy, H. C. Akpati, P. Norlander, and F. B. Dunning, "Low energy dissociative electron attachment to $CFCl_3$, CF_2Br_2, and 1, 1, 1- and 1,1,2-CCl_3F_3: Intermediate lifetimes and decay energies", J. Chem. Phys., **106**, 9594 (1997).

52. L. Zhu and P. Johnson, "Mass Analyzed Threshold Ionization Spectroscopy", J. Chem. Phys., **94**, 5769 (1991).

53. L. A. Chewter, M. Sander, K. Muller-Dethlefs, and E. W. Schlag, "High Resolution Zero Kinetic Energy Photoelectron Spectroscopy of Benzene and Determination of the Ionization Potential", J. Chem. Phys., **86**, 4737 (1987).

54. P. G. Datskos, L. A. Pinnaduwage, and J. F. Kielkopf, "Photophysical and Electron Attachment Properties of ArF-Excimer-Laser Irradiated H_2", Phys. Rev. A, **55**, 4131 (1997).

55. F. Remacle and R. D. Levine, "Physical Aspects and Quantitative Theory of Time Resolved

Spectroscopy of High Molecular Rydberg States", J. Chem. Phys., **107**, 3382 (1997).

56. H. P. Fenzlaff and E. Illenberger, "Low Energy Electron Impact on Benzene and the Fluorobenzenes. Formation and Dissociation of Negative Ions", International Journal of Mass Spectrometry and Ion Physics, **59**, 185 (1984).

57. W. A. Chupka, "Factors Affecting Lifetimes and Resolution of Rydberg States Observed in Zero-Electron-Kinetic-Energy Spectroscopy", J. Chem. Phys., **98**, 4520 (1993).

58. A. Muhlpfordt, U. Even, E. Rabani, and R. D. Levine, "Long Lifetimes of High Molecular Rydberg States in Crossed Magnetic and Electric Fields: An Experimental and Classical Computational Study", Phys. Rev. A, **51**, 3922 (1995).

59. M. Johnston, K. Fujii, J. Nickel, and S. Trajmar, "Ionization of Metastable Neon By Electron Impact", J. Phys. B, **29**, 531 (1996).

60. J. L. Delcroix, C. M. Ferreira, and A. Ricard, "Metastable Atoms and Molecules in Ionized Gases", in *Principles of Laser Plasmas*, G. Bakefi, Editor. 1976, Wiley and Sons: New York. p. 159.

61. J. H. Kolts and D. W. Setser, "Electronically-Excited Long-Lived States of Atoms and Diatomic Molecules in Flow Systems", in *Reactive Intermediates in the Gas Phase*, D. W. Sester, Editor, Academic Press: New York (1979).

62. M. Bourene and J. L. Calve, "De-Excitation Cross Sections of Metastable Argon by Various Atoms and Molecules", J. Chem. Phys., **58**, 1452 (1973).

63. L. G. Piper, J. E. Valazco, and D. W. Sester, "Quenching Cross Sections for Electronic Energy Transfer Reactions Between Metastable Argon Atoms and Noble Gases and Small Molecules", J. Chem. Phys., **59**, 33231 (1973).

64. H. M. Rosenstock, K. Draxl, B. W. Steiner, and J. T. Herron, "Energetics of Gaseous Ions", J. Chem. Phys. Ref. Data, **6 (supplement No. 1)**, I1 (1977).

65. S. Iizuka, T. Koizumi, T. Takada, and N. Sato, "Effect of Electron Temperature on Negative Hydrogen Ion Production in a Low-Pressure Ar Discharge Plasma with Methane", Appl. Phys. Lett., **63**, 1619 (1993).

66. N. Sato, S. Iizuka, T. Koizumi, and T. Takada, "Electron Temperature Control by Movable Pins Installed in a Hollow Cathode for Discharge Plasmas", Appl. Phys. Lett., **62**, 567

(1993).

67. S. Iizuka, T. Takada, and N. Sato, "Enhanced Methyl Radical Production in an Ar/CH4 Pin-Hollow Cathode Discharge", Appl. Phys. Lett., **64**, 1786 (1994).

68. H. F. Winters, "Dissociation of Methane by Electron Impact", J. Chem. Phys., **63**, 3462 (1975).

69. L. A. Pinnaduwage, "Comment on "Effect of Electron Temperature on Negative Hydrogen Ion Production in a Low-Pressure Ar Discharge Plasma with Methane" [Appl. Phys. Lett. 63, 1619 (1993)", Appl. Phys. Lett., **67**, 1034 (1995).

70. H. Sambe, and David E. Ramaker, "Dissociative Electron Attachment in NO", J. Chem. Phys., **94**, 2548 (1991).

71. M. B. Hopkins and K. N. Mellon, "Enhanced Production of Negative Ions in Low-Pressure Hydrogen and Deuterium Discharges", Phys. Rev. Lett., **67**, 449 (1991).

72. T. Mosbach, H. M. Katsch, and H. F. Dobele, "Temporal Behaviour of the H-Minus Density in a Pulsed Multipole Discharge Investigated by the Photodetachment Technique", Plasma Sources Sci. Technol., **7**, 75 (1998).

73. L. A. Pinnaduwage. "Implications of Electron Attachment to Highly-Excited States in Pulsed Power Discharges", Digest of Technical Papers of the 11th IEEE Pulsed Power Conference, (Eds. G. Cooperstein and I. Vitkovitsky) IEEE Publishing Services, New York, 1997. pp. 1048-1053.